ITSU

User Manual

IS2028使用手册

Rev.1.0

CONTENTS

Safety Instructions	2
Warranty Claims	4
Product Parts	5
Moving the Chair	6
Controller Diagram	7
Product Operation Guide	8
Product Features	12
Cleaning And Maintenance	13
Questions And Answers(Q&A)	14
Troubleshooting	15
Product Specification	17
Contact Us	19

聯絡我們

ITSU World Sdn Bhd
Unit BO03-B-13A-1,
Menara 3A,KL Eco City,
No.3,Jalan Bangsar,
59200 Kuala Lumpur.

Tel:1700-81-4878

ITSU World(HK) Limited
Flat A6, 20th Floor, TML Tower,
No. 3 Hoi Shing Road, Tsuen Wan, N.T.

Tel: +852 3611 2228

PT Healthy World
Lodan Center Block O No 20
Jalan Lodan Raya No 2
Jakarta Utara 14430

Tel: +62 21-6983 1123

產品規格

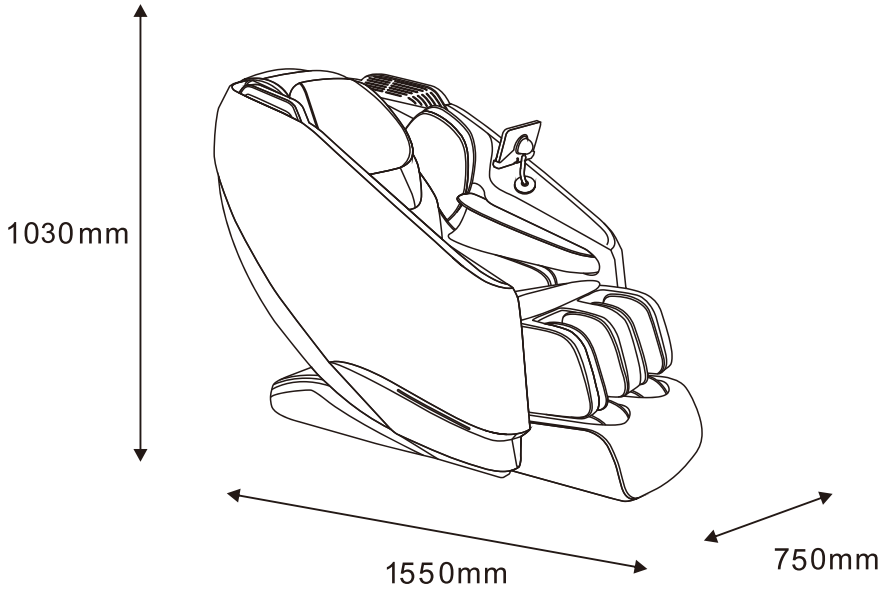

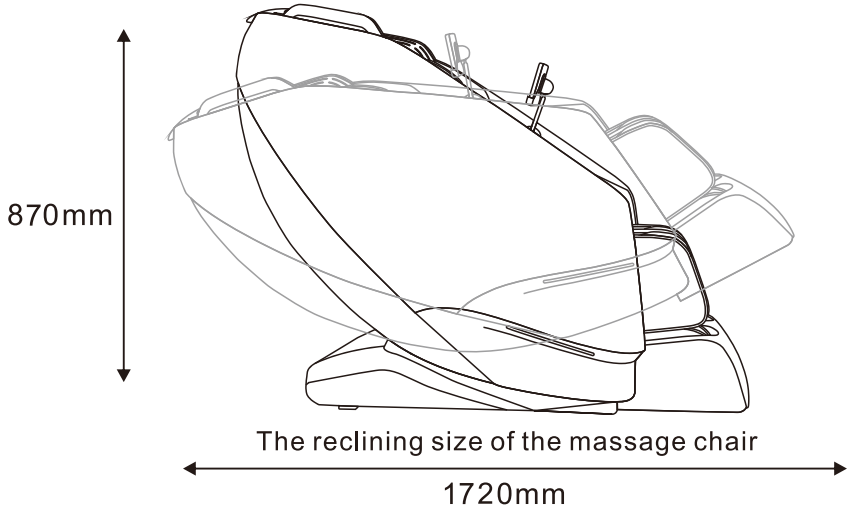

Safety Instructions

Warning!

The plug must be fully inserted into an appropriate outlet. Improper connection of the equipment-grounding conductor can result in the risk of electric shock.

Check with a qualified electrician and service personnel if you are in doubt as to whether the product is properly grounded. Do not modify the product's accompanying plug. If the outlet is not suitable, be sure to have a proper outlet installed by a qualified electrician.

When using the massage chair, basic precautions should always be followed to reduce the risk of electric shock, burns, fire, or injury.

Read the following details before use:

1. Be sure to insert the massage chair plug into the proper electrical outlet.
2. Make sure that the power plug is securely inserted into the proper electrical outlet to reduce the risk of short-circuit and fire.
3. Always unplug the massage chair from the electrical outlet immediately after use and before cleaning.
4. Do not use the massage chair in places where the humidity is high.
5. Do not use the massage chair outdoors and avoid places with direct sunlight.
6. If the power goes off during use, be sure to turn the power switch to the OFF position and pull the power plug out from the socket to prevent any damages when the power comes back.
7. Never operate the massage chair if the power cord is wet or damaged.
8. Never plug/unplug the power cord from the socket with wet hands.
9. Close and continuous supervision is necessary when this appliance is used by or near children, invalids or disabled persons.
10. Use this appliance only as described in this user manual.
11. Do not use any attachments other than those recommended by ITSU.
12. Do not stand, sit or jump in the calves rest when the massage chair is in use. This may result in an accident or injury.
13. Do not attempt to stand on the backrest and armrest .This may result in an accident or injury.
14. Be careful not to fall asleep during the massage.

Safety Instructions

15. Always keep the massage chair clean and never insert any object into the gaps on and around the massage chair.
16. Do not remove the massage chair by pulling the power supply cord.
17. Be sure to check that there is no one (children in particular), pets or obstacles under the massage chair prior to lowering the leg rest /backrest.
18. Always check whether the surface of the massage chair is torn or ripped before use. If you find any unfamiliar tears in any area of the cloth in the backrest, do not use the massage chair. Kindly contact ITSU service center immediately for repairs.
19. This appliance is designed for household use only.
20. For those suffering from illnesses, please consult your doctor on whether you can use the massage chair if in doubt.
21. The following persons are requested to consult a doctor prior to use in order to reduce the risk of the user feeling sick or suffering from an injury:
    - Those who have a malignant tumor;
    - Those who suffer from heart disease;
    - Those who are experiencing pregnancy, menstruation and puerperal;
    - Those who require complete rest;
    - Those who are under medical treatment;
    - Those who suffer from back problems or whose backbone is abnormal or bent.
22. If you experience pain during use, stop the massage chair immediately. If any injuries happen, consult a doctor immediately. ever massage on swollen or inflamed parts of the body.
23. This product is a non-professional appliance designed to provide a comfortable massage. Do not use this product as a substitute for medical treatment.
24. Do not use this massage chair for more than 30 minutes at one time and kindly limit the massage to a concentrated area for not more than 15 minutes. Over-massaging can result in overheating, and thus reducing the product's lifespan.
25. Do not operate where aerosol (spray) products are used or where oxygen is being administered.
26. The massage chair is not suitable for children aged 12 years old and below.

產品規格

電　源		AC220–240V~,50–60Hz
消 耗 電 力		120W
自 動 關 閉		約30分鐘
尺 寸	未傾斜時 (長 x 寬 x 高)	約 1550mm x 750mm x 1030mm
	傾 斜 時 (長 x 寬 x 高)	約1720mm x 750mm x 875mm
重　　量		約59kg
包 裝 箱 尺 寸 (長 x 寬 x 高)		1430mmx750mmx870mm
重 量(含 包 裝 箱)		約69kg
使 用 環 境		環境溫度:0°C~35°C 相對濕度:20%~80%
儲 存 環 境		環境溫度:-5°C~35°C 相對濕度:20%~80%
用 户 最 大 體 重		約120kg
進 門 尺 寸		最小78CM

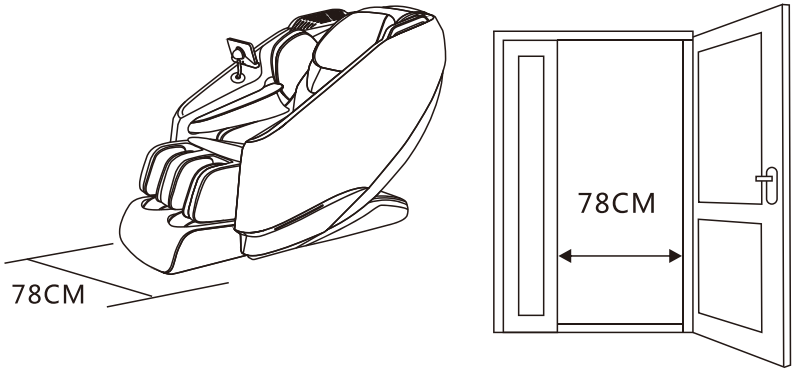

對於體重100kg或以上的人士，產品運作時可能產生更大的噪音而且面料外罩可能磨損得更快。

故障維修

關于運行過程中本機發出的聲音和令人在意的感覺

在使用中會發生下述動作音、感覺，不過這是因按摩椅的結構而發生，并非异常。

- 按摩輪由“伸出”改爲“收回”時的聲音
- 動作時按摩輪擦過面料上的皺紋時發出的聲音和感覺
- 揉按、捶拍動作等的動作音
- 按摩輪動作時的摩擦聲
- 上下運動時的動作音
- 傳送帶的轉動音
- 電機音
- 靠背傾斜時扶手與靠墊的摩擦聲
- 按摩輪與布料的摩擦聲
- 氣囊按摩運作時的充氣泵工作音
- 氣囊按摩運作時的排氣音
- 氣囊按摩運作時座椅下電磁閥發出的工作音。
- 腿置臺的晃動
- 肩部伸展、動作時的聲音
- 氣囊的動作音
- 脚部按摩的滑動音

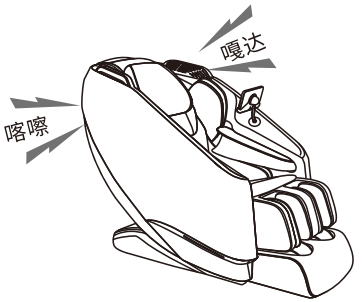

當聲音變大時，也有可能發生了故障。

- 此時，請委托授權服務中心進行檢查和修理。

⚠ 警告

- 請勿擅自改造本機。請勿自行分解或修理本機。否則可能導致起火、异常動作、人身傷害。

⚠ 警告

- 發生异常、故障時，立即停止使用，拔掉電源插頭。（否則可能冒烟、起火、觸電）

<异常、故障事例>

- •接通電源開關后可能不動作
- •移動電源綫，有時通電有時不通電
- •運行中發出焦臭味、异常聲響
- •按摩椅變形或者异常發熱

→請立即委托授權服務中心檢查和修理。

Safety Instructions

27. If the power plug is damaged, it must be replaced by a special plug available from ITSU or authorized agents.
28. As a safety precaution , Motor will stop working automatically (for protection) if apply too strong external force during use. Once appear above, switch OFF power ,and switch ON again after 10 seconds . Please pay attention to this ,especially for user whose weight over 100KG.
29. The appliance has a heated surface. Persons insensitive to heat must be careful when using the appliance.
30. This appliance can be used by children aged from 8 years and above and persons with reduced physical, sensory or mental capabilities or lack of experience and knowledge if they have been given supervision or instruction concerning use of the appliance in a safe way and understand the hazards involved
31. The appliance is not to be used by persons (including children) with reduced physical, sensory or mental capabilities, or lack of experience and knowledge, unless they have been given supervision or instruction.
32. Children being supervised not to play with the appliance.
33. The appliance has a heated surface. Persons insensitive to heat must be careful when using the appliance.

Warranty Claims

1. Warranty is not transferable.
2. This warranty is effective only if the product is purchased from ITSU.
3. Proof of purchase (original receipt) is required for all warranty repairs.
4. All implied warranties, including but not limited to these implied warranties of fitness and merchantability, are limited to the duration stated in the warranty policy.
5. Damage due to misuse, improper treatment and unauthorized modification and repair are not covered by this warranty.
6. Warranty does not cover accessories and attachments which do not belong to the massage unit.
7. Warranty is not effective to rental, business, commercial, institutional or other non-residential users.
8. All services covered by this warranty must be approved by ITSU and repaired by authorized technicians only.
9. If replacement parts for defective materials are not available, ITSU reserves the right to make substitution in lieu of repair or replacement.

Product Parts

- Total 3 air valves (3 individual massage mechanism)
- A combination of 16 airbags

故障維修

發現故障后，首先檢查并嘗試一下方法。
如果在嘗試后，故障依然存在，請聯系銷售店。

問題	原因和處理方法
本使用本機過程中按摩輪停止	在使用過程中，按摩輪遇到過大的外力時，處于安全考慮，按摩輪可能會停止移動。 如果按摩輪再次停止，請調整自己的坐姿，不要使背部完全貼在靠背上。（應注意遵守相關注意事項，尤其在體重爲100kg或以上的人使用時。）
不能傾斜 腿置臺不能升高降低	如果本機遇到了障礙物或者在使用本機時用力過大，處于安全考慮，本機將停止工作。 當所有顯示的內容及按鈕在閃爍時，且靠背或腿置臺已停止工作，關閉本機電源一次，約10秒鐘后再次打“開啓”電源，然后操作本機。
按摩輪沒有達到肩部或頸部的位置	如果頭部沒有接觸到靠枕，或背部沒有接觸到靠背，在體型檢測過程中肩部位置可能低于實際位置。坐在座椅的最深位置，將頭部靠在靠枕上，然后從頭開始重新操作。
左右按摩輪的蓋度（強度）不同	因爲搭載了可進行按摩輪交互捶拍動作的按摩機芯，出現這種情況純屬自然，并非機體故障。
本機根本無法運行。	● 電源綫連接已斷開。 ● 没有打開本機電源開關。 ● 按下遥控器上的 ⏻ 按鈕后，没有選擇任何程序。
背部都沒有溫熱感	● 温熱按鈕被設定爲關閉狀態。 ● 温感的感知程度根據用户的提醒，按摩手法，衣服，室温而有所不同。
按摩結束后，即使重新按下 ⏻ 按鈕，也無法接通電源	● 按摩結束后大約需要10秒鐘程序才終止。當所有運作均已停止后至少等待10秒鐘，然后再按 ⏻ 。
本機已受損 電源綫或電源插頭异常發熱	爲防止事故發生，請務必與授權服務中心聯系。

疑問解答（Q&A）

Q 因為生病而經常出入醫院的人可以使用本產品嗎？

A **經常出入醫院的人，請在醫生商量的前提下使用本產品。**

按摩即所謂“觸壓刺激”，即通過對肌肉進行壓迫，緩解肌肉緊張，促進血液流動。根據不同的病因，按摩有可能造成病情惡化，因此請務必在和主治醫生商量之后使用本產品。

Q 身高多少的人適合使用本產品？

A **根據體型的不同多少會有所差异。請大致參考下文使用產品。**

- 身高小于145cm的用户，及身高超過185cm的用户同時使用上半身按摩和小腿、脚部按摩時，可能出現足底與脚部按摩部接觸不充分，或膝蓋彎曲的情況。

身高較高的用戶感覺膝蓋部位彎曲時

請選擇下述方法Ⓐ

Ⓐ 放倒靠背，降低小腿、脚部按摩部位置。

身高較矮的用戶難以向下觸到足底按摩部時

請選擇下述方法Ⓐ

Ⓐ 抬起靠背，升高小腿、脚部按摩部位置。

Q 搬家時，有什么需要特別注意的地方？

A **請注意一下事項。**

• 為了方便搬運，請先將按摩椅靠背傾斜到最低位置
• 搬運時，人不要坐在座椅上。

① 按下開機鍵，接通電源。

② 按下 ( ) 使靠背呈完全傾斜狀態。

請長按這個按鈕，直到靠背和小腿停止移動。

③ 按下關機鍵，拔掉電源線。

- 在有原裝紙箱的情況下，請先確認電源綫未被纏繞在本機上，將電源綫纏好放在座面上；搬運的時候，請注意電源綫没有掉落且未與地面發生摩擦。

- 在没有原裝紙箱的情況下，爲了防止機體劃傷和搬運中的震動，請妥善使用其他包裝輔材包裹本品。

Q 有點在意按摩椅運作時發出的聲音.....

A **按摩椅運作時產生的聲音，一般是由于機芯構造而發出來的。**

Q 按摩中感覺左右兩邊按摩輪的按摩力度有差异，要緊嗎？

A **由于機芯構造，在按摩過程中，確有可能感覺左右按摩輪的力度有差异。**

爲了能够模擬出最自然的按摩手法，本品機芯采用了允許左右按摩輪交替捶背的機芯構造。在按摩過程中，左右按摩輪接觸背部的具體位置可能稍有差异，從而導致了使用者産生左右兩側按摩力度有所不同的感覺。此時，本品本身并未發生故障。

Moving the Chair

As illustrated, first push the backrest downwards, and then tilt the massage chair onto its wheels to approximate 30 degree to easily mode the chair around the hosue a light pull or push.

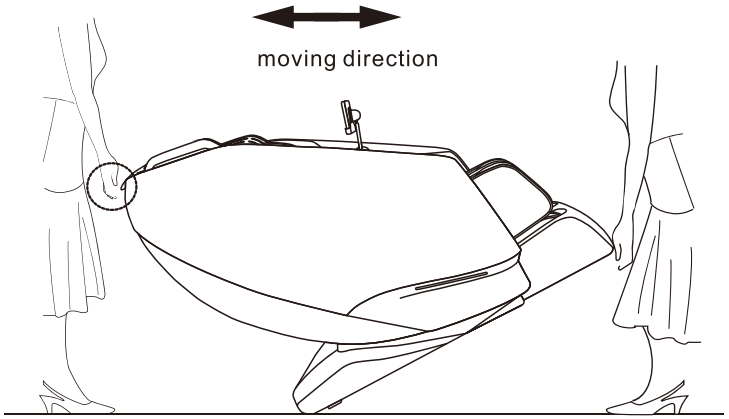

Caution:

1.Do not move the massage chair when it is occupied.
2.Unplug the massage chair cable from power source.
3.Do not drop or suddenly let go of the chair when moving as it may damage the chair.
4.Two person participation is recommended.
5.Placing a mat underneath the massage chair is advisable, as moving process mightinduce scratches on the floor.

Controller Diagram

Controller display

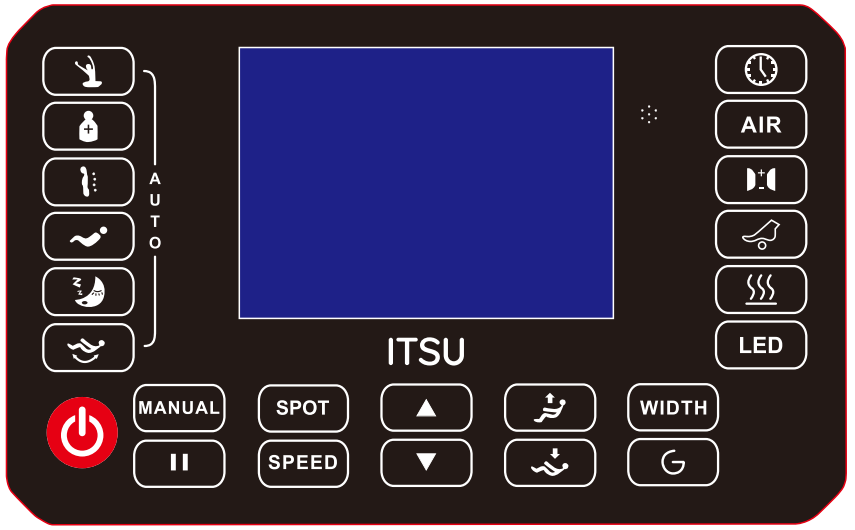

清洗及保養

清潔合成皮革

使用柔軟的干布擦拭皮革。

- 切勿使用諸如稀釋劑、汽油、酒精等化學品清潔本機。
- 使用市面銷售的皮革保養品（抹布）時，請遵照其使用説明。
- 如果合成皮革特別髒，則通過以下方式擦拭。
  1、將軟布浸入水中或含3%至5%中性洗滌劑的熱水中，然后徹底擰干。
  2、使用上述軟布擦拭皮革表面。
  3、使用浸過清水且已徹底擰干的布料擦掉清潔液。
  4、使用擰干的軟布擦拭。
  5、使其自然風干。
- 難以去除污漬時，請將在市面上購買的三聚氰胺泡棉進入中性洗滌劑中，然后用它擦拭本機。
- 不要使用吹風機吹干表面。
- 由于布料的顏色會染到合成皮革的表面上，因此在使用牛仔布和彩色布料擦拭本機時務必小心。
- 不要使這些部件長時間與塑料接觸，因爲這會導致褪色。
- 合成皮革有變色的可能，所以在使用染發劑時，請將接觸的部分用毛巾覆蓋。

清潔塑料部位

1 **將軟布浸入水中或含有中性洗滌劑的熱水中，擰干后，擦拭本機塑料部。**

- 切勿使用諸如稀釋劑、汽油、酒精等化學品清潔本機。

2 **使用浸有清水且已徹底擰干的布料擦拭。**

- 擦拭遥控器前請務必擰干布料。

3 **使其自然風干。**

功能特點

ITSU按摩椅通過電腦智能化控制，配合揉捏、推拿、脚滚和氣壓功能等多種按摩手法及組合，針對各個穴位進行按摩，有效舒緩疲勞，促進新成代謝及加强血液循環。

具備各種全身自動/手動按摩功能以符合您的各種要求。

除了精確的穴位按摩外，可同步進行各種按摩功能以形成特制按摩程序。

1．根據人體工學設計，以提供更有效的按摩效果。

2．定時功能將按照你的需求對按摩時間進行調整。

3．手控器更易于操作。

4．具備過熱過流保護，更加安全。

5．操作是由微型智能處理器控制，使性能始終如一，卓越有效。

6．本產品配有加熱功能，對熱不敏感者慎用。

Product Operation Guide

Function description of Controller buttons.

1.Press to enable Relaxalion Program

2.Press to enable Circulation Program

3.Press to enable Genki Program.

4.Press to enable Deep Program.

5.Press to enable Night Program

6.Press to enable Swing Program.

7.Press to adjust time.

8.Press

to adjust air bags Program.

9.Press to adjust air bags intensity.

10.Press to enable/disable foot roller.

11.Press to enable/disable heat.

Product Operation Guide

12. Press LED to enable LED light.

13. Press MANUAL to adjust manual modes.

14. Press SPOT to enable/disable SPOT massage.

15. Press ▲ to adjust massage gearbox upwards.

16. Press to adjust backrest upwards.

17. Press WIDTH to adjust roller width.

18. Press II to pause.

19. Press SPEED to adjust manual massage speed/strength.

20. Press ▼ to adjust massage gearbox downwards.

21.Press to adjust backrest downwards.

22. Press to enable/disable zero-G.

操作說明

使用之後

1.關閉按摩椅回到初始位置。

- 在調節按摩椅角度前，請確認周圍，特別注意附近可能有小孩、寵物。
- 請確保手和腿遠離按摩椅的縫隙，避免可能造成的傷害。

2.按下主開關（位於按摩椅後面）關機，將手控器放回手控器袋。

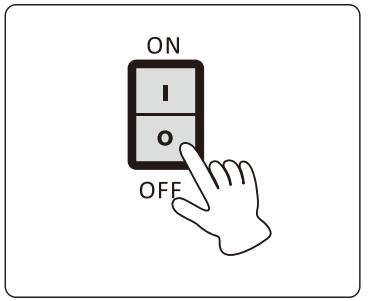

3.關閉主開關並拔掉電源線插頭。

- 請勿用拉扯電源線的方式拔插頭。
- 請勿用濕手拔插頭。

操作說明

手控器界面

按自動程序鍵，可選擇相應自動按摩程序；

F1：放松按摩
F2：肩頸按摩
F3：下背部按摩
F4：强力按摩
F5：睡眠按摩
F6：輕鬆摇擺

屏幕右邊圖標為當前按摩手法：

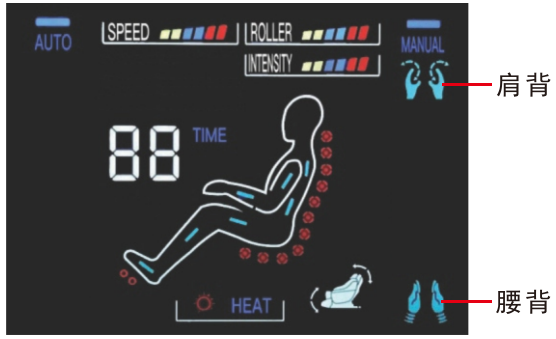

藍牙連接說明

- 打開手機藍牙功能搜索藍牙，找到本機藍牙（IS2028），配對成功，打開手機音樂開始播放。

Product Operation Guide

Description of LCD icon menu

Press the automatic mode button to select the corresponding automatic massage procedures.

F1: Relaxing Massage

F2: Shoulder and Neck Massage

F3: Lower Back Massage

F4: Intensive Massage

F5: Sleep Massage

F6: Swing Massage

The icon on the right side of the screen represents the current massage mode:

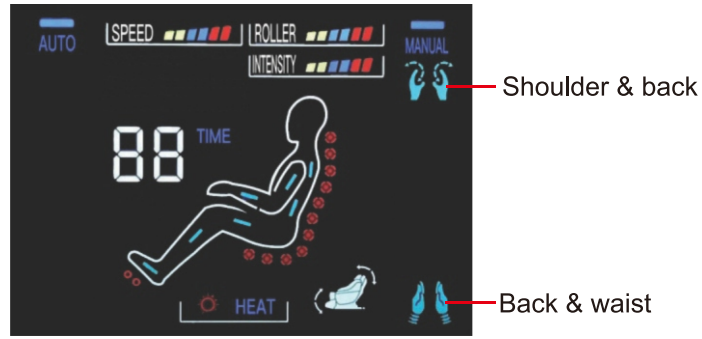

Bluetooth connection instructions

Turn on the Bluetooth on the mobile phone to search for Bluetooth, find the local Bluetooth(IS2028), match successfully, turn on the Mobile Music and play music.

Product Operation Guide

After use

1.Switch OFF the massage chair to return back to original position.

- Please check surronding, paying special attention to children or pets that may be located in close proximity, before adjusting massage chair backrest/footrest angle.
- Please make sure arms and legs are away from gaps to prevent any possible injury.

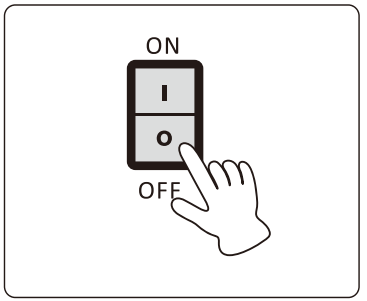

2.Press POWER button (located at the bottom back of the massage chair) to turn OFF the massage chair and restore the remote controller back to the storage compartment.

3.Turn OFF Main switch and unplug from power outlet.

- Do not pull the power cord to remove the plug.
- Do not unplug with wet hands.

操作說明

手控器按鍵功能說明

12.按 LED 鍵開啓LED燈。

13.按 MANUAL 鍵調整按摩模式。

14.按 SPOT 鍵開啓定點按摩模式。

15.按 ▲ 鍵開啓機芯上行模式。

16.按 鍵靠背上升。

17.按 WIDTH 鍵調整按摩椅寬度。

18.按 II 鍵開啓或暫停。

19.按 SPEED 鍵調整手動按摩速度/力度。

20.按 ▼ 鍵開啓機芯下行模式。

21.按 鍵靠背下降。

22.按 G 鍵開啓零重力模式，再按一次關閉。

操作說明

手控器按鍵功能說明

1.按 鍵開啓全身放鬆模式。

2.按 鍵開啓活血循環模式。

3.按 鍵開啓元氣復蘇模式。

4.按 鍵開啓深層按摩模式。

5.按 鍵開啓助眠排毒模式。

6.按 鍵開啓輕鬆搖擺模式。

7.按 鍵調時間。

8.按 AIR 鍵調整氣壓。

9.按 鍵調整氣囊力度。

10.按 鍵調整足底滾輪。

11.按 鍵開啓加熱模式,再按一次關閉。

Product Features

ITSU massage Chair is controlled by a microcomputer that performs various intelligent massage methods and combinations, like Kneading, Pressing, Roling, Footroller and Air Massage. All these massage methods accurately capture the acupressure points that could alleviate fatigue, promote metabolism and improve blood circulation effectively. Equipped with eight of full body automatic program, this preduct thorouahly fulfllsvour various needs.

Various types of manual / auto massage to suit your needs.
Spring-styled massage that is specially structured for the back is designed according to the curve of the human body to provide a more effective and thorough massage.

1, Designed according to body curve, to provide better massage sensations.
2. The Timer Function can be adjusted according to your desired duration of the massage programmer.
3. User friendly operation.
4. Built in with power surge and automatic temperature sensor for safety.
5. The operation is controlled by an intelligent microprocessor for excellent performance and consistent quality.
6. The machine radiates heat on the surface, Do Not use it over sensitive skin areas or in poorly-ventilated areas.

Cleaning And Maintenance

Cleaning of the synthetic leather

Wipe the synthetic leather with a soft dry cloth.

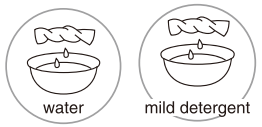

- **Do not clean the product with chemicals such as thinners,gasoline and alcohol.**
- **When using a leather maintenance product(cleaning cloth) sold on the market,follow its directions for use.**
- **If the synthetic leather is very dirty, wipe it with the method below.**

  1、Put a piece of soft cloth into water or 3% to 5% neutral detergent contained hot water and wring it out.
  2、Wip surface of the synthetic leather with the soft cloth.
  3、Wipe the detergent with a piece of cloth once soaked in clean water and wrung out.
  4、Wipe with a piece of wrung soft cloth.
  5、Have the synthetic leather take natrual air drying.

- **If it is difficult to remove the stains on the synthetic leather,soak a piece of melamine foam bought from the market into a neutral detergent and use it wipe the product.**
- **Do not dry the surface by a hair drite.**
- **Surface of the synthetic leather may be dyed by fabric colors; therefore,be careful when wiping the product with denim or colored cloth.**
- **Keep these positions from long-time contact with plastics to avoid fading.**
- **Synthetic leather may discolor,so the position in contact with the hair dye used should be covered by a towel.**

Cleaning of the plastic parts

1 Put a piece of solt cloth into water or neutral detergent contained hot water,wring it out and wipe the plastic parts.

- Do not clean the product with chemicals such as thinners, gasoline and alcohol.

2 Wipe witg a piece of cloth once soaked in clean water and wrung out.

- Wring the cloth out before using it to wipe the remote controller.

3 Have the plastic parts take natural air drying.

控制器

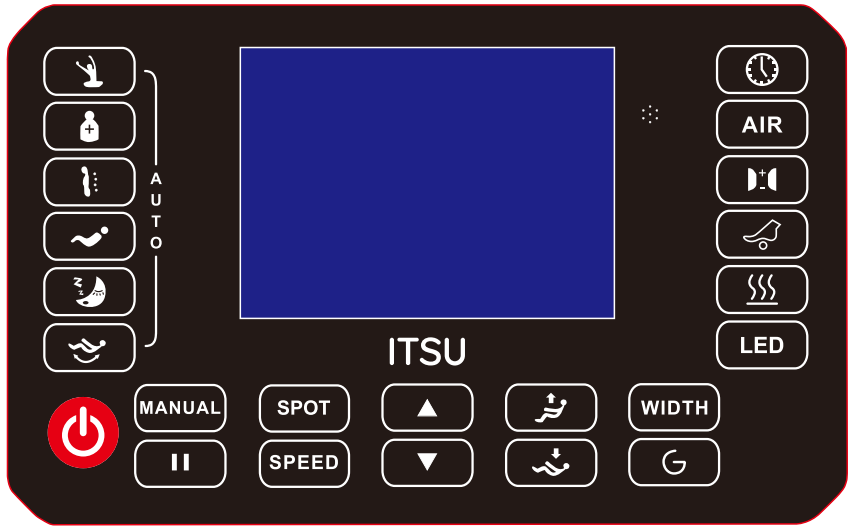

產品移動說明

如圖所示，首先向下推動靠背，然後將按摩椅傾斜約30度，輕輕地拉動或推動椅子。

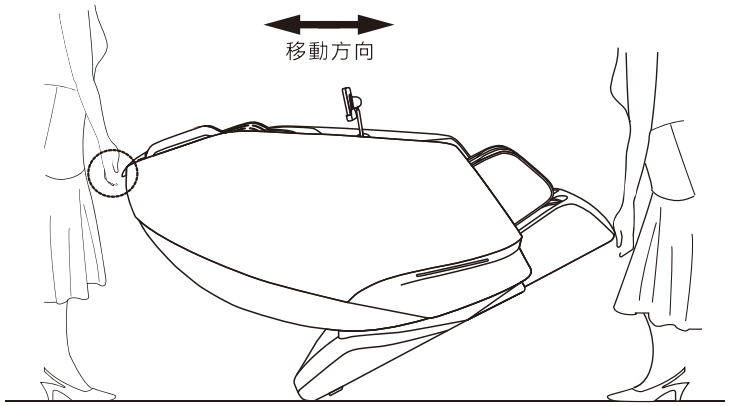

注意：

1.當按摩椅在使用時，請不要移動椅子。

2.請把按摩椅電源線從電源上拔下。

3.在移動時請勿讓掉落或突然放開椅子，否則可能會損壞椅子。

4.建議兩個人參與。

5.建議在按摩椅下方放置墊子，因為移動過程中可能會在造成地板划痕。

Questions and answers(Q&A)

Q Can persons paying frequent visits to hospitals because of diseases use the product?

A These persons should consult physicians before using the product.
Massage is the so-called "touch-pressure stimulation": Muscles are compressed to relieve their tension and promote hemokinesis. Some diseases may get worsened because of massage. Thus, consult the attending doctors before using the product.

Q How about the body height requirement for use of the product?

A The body height requirement differs with the specific body type. See the rough reference below when using the product.
If a person shorter than 145 centimeters or taller than 185 centimeters uses the upper body massage function and the Lower Leg/Foot massage function of the product at the same time, it will be possible that his soleswill have poor contact with the foot massage section or that his knees will need to be bent.

For a taller person with knee bending when using the product:

Select method Ⓐ

Ⓐ Tilt the backrest and lower the Lower Leg/Foot massage section.

For a short person difficult to touch the foot massage section:

Select method Ⓐ

Ⓐ Raise the backrest and lift the Lower Leg/Foot massage section.

Q Are there any things needing special attention during moving?

A Pay attention to the following things during moving.
For convenience during moving, tilt backrest of the product till the lowest position.
During handling, do not sit on the product.
①Press ON button power on the product.

②Press [icon] to make the backrest completely tilt.
Press and hold on these two buttons until backrest and footrest stop.

③Turn off the power switch and pull out the power plug.

- If the original packing box is unavailable, make sure the power line is not wound on the product, wind it and place it on the seat surface. When handling the product, keep the power line from falling off and rubbing with ground.
- If the original packing box is unavailable, properly keep other packing auxiliary materials and wrap the product with them to avoid scratch and vibration during handling.

Q I care about the sounds the product makes when being used.

A It is caused by the core structure.

Q Does it matter if the massage wheels have different massage intensities?

A This phenomenon possibly exits during massage because of the core structure.
To simulate the most natural massage effect, the product is designed with a core structure allowing alternate back massage by a left massage wheel and a right massage wheel. During massage, the massage wheels possibly have slightly different positions on the back. That' s why you have that feeling. It is not a fault.

Troubleshooting

After a fault happens, inspect and try the corresponding method below.
If the fault still exists after that, contact the shop from which you bought the product.

Fault	Cause and elimination method
The massage wheels stop during use	**For safety, the massage wheels will possibly stop upon a too large external force during use.** At this point, you need to adjust your sitting position, and don't put your back completely on the backrest.(Pay attention to the relevant precautions, especially when used by customer whose weight is100 Kg or more.)
The backrest can not recline up and down or the footrest can not be lifted up and down	**For safety, the product will stop upon an obstruction or a too large force.** If all contents and buttons are flickering and the backrest or the footrest has stopped, turn off the power supply and turn it on about 10 seconds later and then operate the product.
The massage wheels cannot reach the shoulders or the neck	If the head is not in contact with the headrest, or the back is not in contact with the backrest, the shoulder position in body type detection will possibly be lower than the actual position. Sit in the deepest position of the product, lean your head on the headrest and operate from the beginning again.
The left and right massage wheels have different heights (intensities)	It is not a fault but a normal phenomenon because the product is provided with a massage core allowing alternate beats of the massage wheels.
The product cannot run at all	● The power line is disconnected. ● The power switch is not turned on. ● No program is selected after ⏻ on the remote controller is pressed.
No warm feeling in backrest	● The heating button is set to be OFF. ● The warm feeling depends on factors such as body type, massage method, clothes and room temperature. Please keep back close to the heat-sensing conduction part to make the custoner feel warm.
The power supply cannot be connected even if ⏻ is pressed again after the massage	● The program will terminate about 10 seconds after the massage has ended. Press ⏻ at least 10 seconds after all the movements have stopped.
The product is damaged	To avoid accidents, contact an authorized service center.
The power line or the power plug has abnormal heating	

產品部件

- 一共3個氣閥(3個獨立的按摩機制)。
- 16個氣囊组合。

保修權限

1. 本保修權限不可轉讓。
2. 本保修服務僅對在ITSU購買的產品有效。
3. 當要求保修服務時，請出示購買證明（正本收據）。
4. 所有保修項目，包括但不限於這些健身及適銷性的保修項目有效期限需視保修政策而定。
5. 因錯誤使用、處理不當以及未經授權私自改裝和維修產品而導致的損壞，不屬於保修範圍。
6. 此保修範圍不包括不屬於產品本身的附件。
7. 此保修範圍不適用於租憑、交易、商業、機構或其他非住宅用戶。
8. 此保修範圍內所涉及的維修服務需經過ITSU授權，且必須由授權的技術人員維修。
9. 若需更換的維修附件缺貨，ITSU有權採用替代配件進行維修。

Troubleshooting

The sounds and feelings you care about in use of the product

You will hear or have the following sounds or feelings when using the product. It is not abnormal phenomena but results of the product structure.

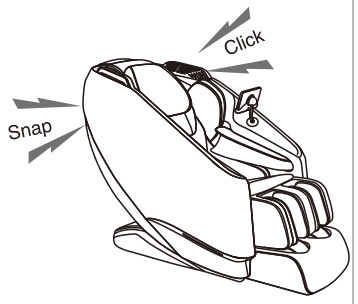

- Sound when the stretching massages are retracted
- Sound and feeling when the massage wheels rub patterns on the fabric
- Sound of movements such as kneading and beat
- Friction sound of the running massage wheels
- Sound of up-down movement
- Sound of the conveyor belt
- Motor sound
- Friction sound between the armrests and the back cushion when the backrest is tilting
- Friction sound between the massage wheels and the fabric
- Sound of the inflator pump during Air Bag massage
- Sound of air exhaust during Air Bag massage
- Running sound of the solenoid valve at bottom of the product during Air Bag massage.
- Swing of the footrest
- Running sound of the air bags
- Sliding sound of the foot massage section

If the sound is loud, it is also possible that the product has failed.

- In this case, have the product inspected and repaired by an authorized service center.

⚠ Warning

- **Do not refit, disassemble or repair the product without permission.**
  Otherwise fires, abnormal movements or personal injuries may happen.

⚠ Warning

- **In the case of any abnormality or fault, stop the product immediately and pull out the power plug to avoid fuming, fires and electric shocks.**
  < Abnormality and fault examples>
  • The product fails to work after the power switch is turned to the ON position;
  • After the power line is moved, the product is discontinuously powered on;
  • In use, the product gives off a burning smell or an abnormal sound;
  • The product is deformed or abnormally heating
  → In any of these abnormalities and faults, have the product inspected and repaired by an authorized service center immediately.

Product Specifications

Power supply		AC220-240V~,50-60Hz
Power consumption		120W
Automatic power-off		Approx. 30 minutes
Dimension	When it is not tilting (L x W x H)	Approx. 1550mm x 750mm x 1030mm
	When it is tilting (L x W x H)	Approx. 1720mm x 750mm x 870mm
Weight		Approx.59kg
Dimensions of packing box (L x W x H)		1430mmx750mmx870mm
Weight(including the packing box)		Approx. 69kg
Operating Conditions		Ambient temperature:Approx.0°C~35°C Relative humidity:Approx.20%~80%
Storage Conditions		Ambient temperature:Approx.-5°C~35°C Relative humidity:Approx.20%~80%
Maximum body weight of user		Approx. 120kg
Entrance size		Minimum 78cm

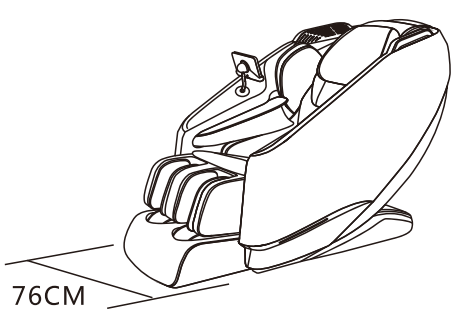

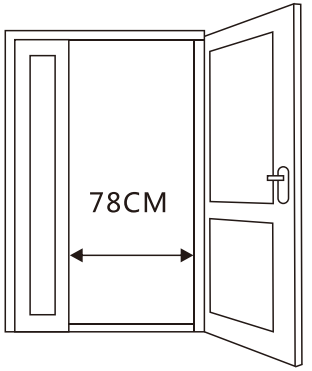

For a user heavier than 100 kilograms, the product may have bigger noise and its fabric housing may be worn quicker.

安全説明

21. 為避免因使用此按摩椅而導致不適或傷害，以下人士在使用本產品前應諮詢醫師：
    - 患有惡性腫瘤者
    - 患有心髒病者
    - 孕婦、產婦或月經期者
    - 需要安靜休息者
    - 正在接受治療者
    - 有背部疾病者，脊椎異常或扭曲者

22. 如在使用過程中覺得疼痛，請立即停止使用；如果在使用過程中受到損傷，請立即就醫。

23. 本產品僅為家庭提供舒適的按摩享受，並非專業的按摩醫療機械，因此不能代替專業的治療。

24. 建議每天使用按摩椅的時間為 30 分鐘，按摩同一部位時間不宜超過15分鐘，否則過度按摩會導致適得其反的效果，而且長時間使用會導致按摩椅過熱並縮短產品使用壽命。

25. 請勿在噴氣體溶膠或輸氧的環境中使用本產品。

26. 12歲或以下兒童不適宜使用本產品。

27. 如果電源線損壞，必須使用ITSU或合法代理商所提供的專用電源線。

28. 使用過程中若施加過大的外力，爲安全起見，機芯會自動停止以保護。當出現該情況時，先切斷整機電源，10秒后再接通電源進行操作。特別是體重超過100KG的用户，使用時要特別注意。

29. 該設備具有加熱表面，對熱不敏感的人一定要小心使用設備

30. 此設備可以讓年齡從8歲以上兒童,肢體，感官或心智能力有缺陷，或者缺乏經驗知識的人使用，如果他們被監督，或者有經過有關使用本產品安全的方式和理解其危害性的指導。

安全説明

警告!

此按摩椅必須使用與插頭相配的插座。不正確的接地將會導致觸電危險的發生。

請不要擅自改裝插頭或插座，務必委託專業的技術人員進行檢查。

使用電器產品時，為減少觸電、灼傷、火災、或人員傷害的危險，應遵守基本安全預防措施，包括以下內容：

在使用前請閱讀所有的使用説明。

1. 務必使用與插頭相配的插座。
2. 一定要確保插頭完全插入插座內，以減少短路或火災危險。
3. 在使用後或清潔前，請務必及時拔掉插頭。
4. 請勿在高濕度的環境下使用本產品。
5. 請勿在室外或陽光直射的地方存放或使用本產品。
6. 如果在使用過程中突然停電，請立即將開關撥至「O」的位置，且拔掉插頭，以免來電時損壞本產品。
7. 當電源線潮濕或損壞時請勿使用按摩椅。
8. 請勿用濕手插入和拔掉插座，以免發生意外。
9. 當小孩、傷殘人士、行動不便者在按摩椅附近或使用按摩椅時，一定要有人在場看護。
10. 只能將本產品用於本説明書中闡述的用途。
11. 不要使用非 ITSU 推薦的附件。
12. 在使用過程中請勿坐在按摩椅小腿上，以免導致意外。
13. 請勿試圖站在扶手或靠背上，以免按摩椅發生傾倒從而導致意外。
14. 按摩過程中請勿進入睡眠狀態。
15. 請經常保持按摩椅清潔，避免將其他物體插入按摩椅的縫隙中。
16. 請勿直接透過拉扯電源線來移動按摩椅。
17. 請確保當降低小腿或靠背時，其下方無其他物體，特別是小孩。
18. 請在每次使用前，檢查按摩椅靠背絨布等處是否有異常裂縫。如有異常，請勿使用並即時聯繫 ITSU 售後服務中心。
19. 本產品僅為居家使用而設計。
20. 當您無法確定自己是否能使用按摩椅時，請先諮詢醫師。

Product Specifications

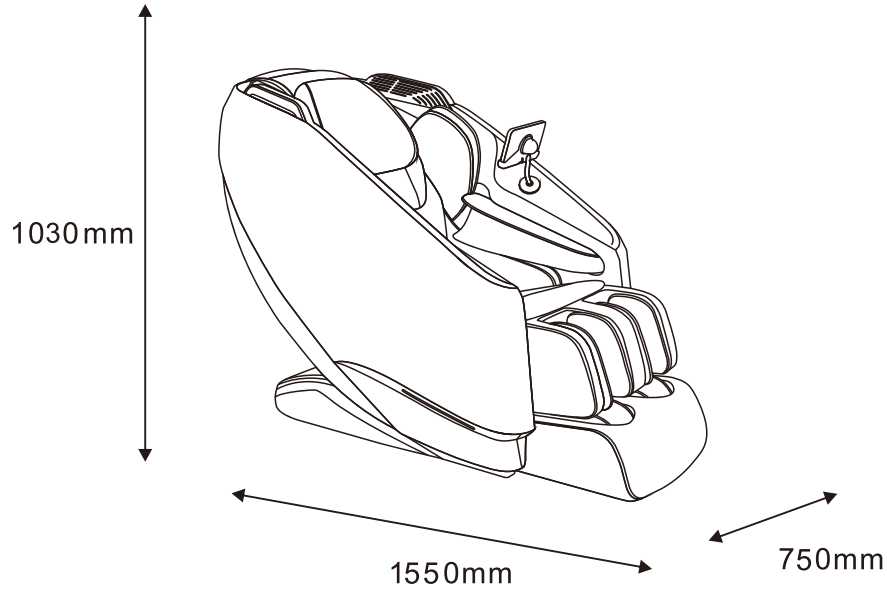

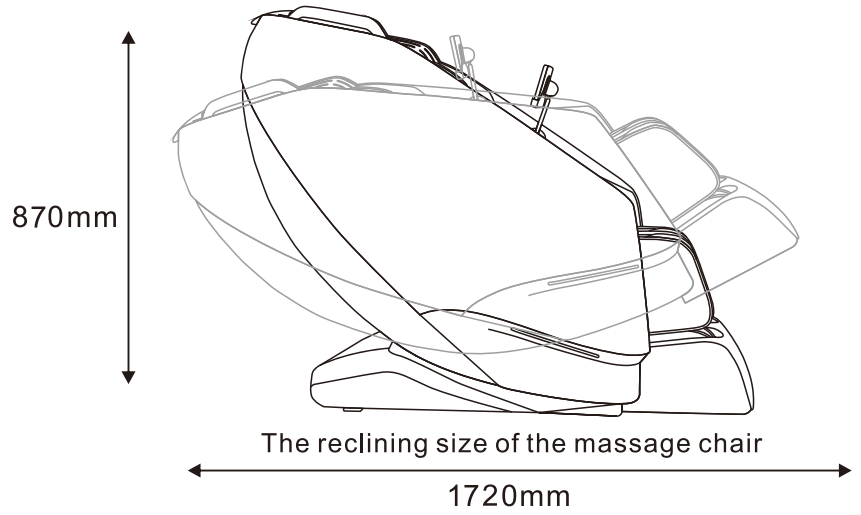

Contact Us

ITSU World Sdn Bhd
Unit BO03-B-13A-1,
Menara 3A,KL Eco City,
No.3,Jalan Bangsar,
59200 Kuala Lumpur.

Tel:1700-81-4878

ITSU World(HK) Limited
Flat A6, 20th Floor, TML Tower,
No. 3 Hoi Shing Road, Tsuen Wan, N.T.

Tel: +852 3611 2228

PT Healthy World
Lodan Center Block O No 20
Jalan Lodan Raya No 2
Jakarta Utara 14430

Tel: +62 21-6983 1123

目錄

安全說明	21
保修權限	23
產品部件	24
產品移動說明	25
控制器	26
操作說明	27
功能特點	31
清洗及保養	32
疑問解答（Q&A）	33
故障維修	34
產品規格	36
聯絡我們	38